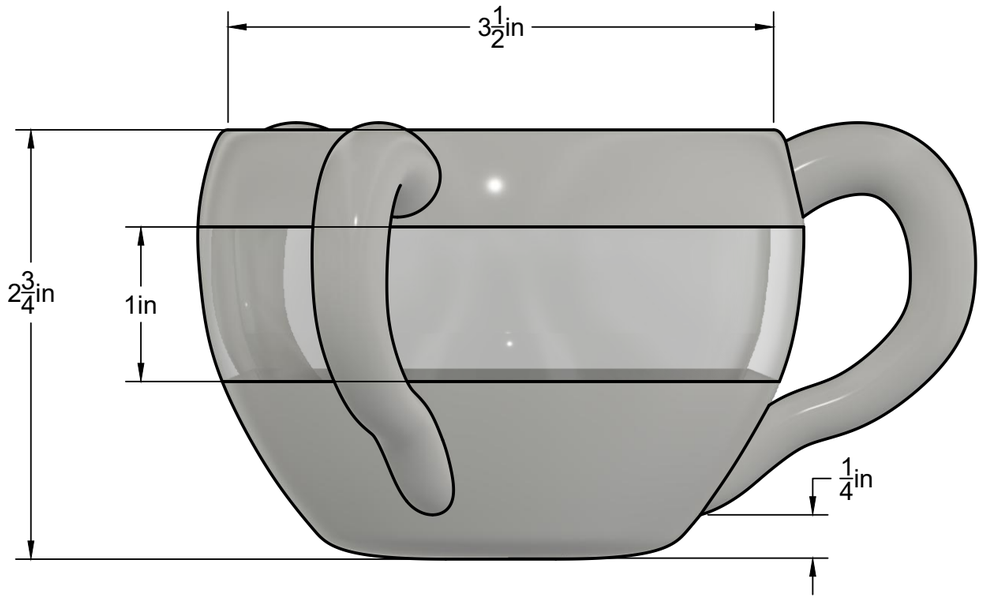

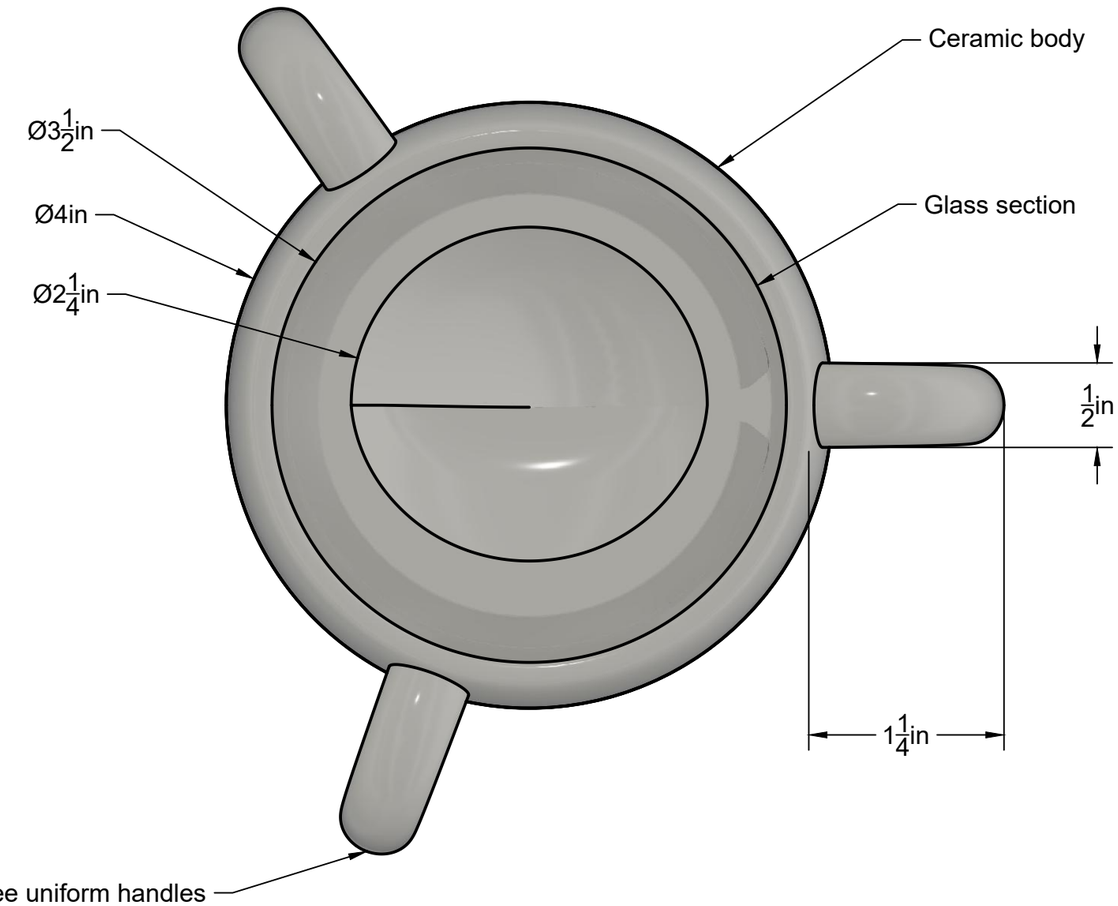

PROJECT PDI 3				
TITLE Cup				
APPROVED	SIZE	CODE	DWG NO	REV
CHECKED	B			
DRAWN Alex N 11/5/2018	SCALE 1:1	WEIGHT	SHEET 1/1	